SHEET CONTENT:

PAGE #1 INDEX & COVER PAGE.
PAGES #1A, 2 & 3 HOLLOW METAL DOOR ASSEMBLY DETAILS.
PAGE #4 HOLLOW METAL DOOR COMPONENT DETAILS DETAILS.
PAGE #5 HOLLOW METAL FRAME COMPONENT DETAILS DETAILS.

DOOR SCHEDULE		
Max. A.S.D. Design Pressure Rating		
	Where water infiltration Requirement is needed	Where water infiltration Requirement is not needed
Positive	Not Approved	+60 PSF
Negative	Not Approved	−60 PSF

WALTER A. TILLIT JR. LICENSE No. 44167 STATE OF FLORIDA PROFESSIONAL ENGINEER

8/17/2023

GENERAL NOTES AND SPECIFICATIONS:

1. SERIES LS18 FLUSH OUTSWING COMMERCIAL STEEL DOOR, SHOWN ON THIS PRODUCT EVALUATION DOCUMENT (P.E.D.) HAS BEEN VERIFIED FOR CODE COMPLIANCE IN ACCORDANCE WITH THE **2023 (8th EDITION)** OF THE FLORIDA BUILDING CODE. DOOR MAY BE INSTALLED AT HIGH VELOCITY HURRICANE ZONES.

DESIGN WIND LOADS SHALL BE DETERMINED AS PER SECTIONS **1620** OF THE ABOVE MENTIONED CODES, USING **ASCE 7–22** AND SHALL NOT EXCEED THE MAXIMUM (A.S.D.) DESIGN PRESSURE RATINGS INDICATED ON THIS SHEET.

IN ORDER TO VERIFY THE ABOVE CONDITION, ULTIMATE DESIGN WIND LOADS DETERMINED PER **ASCE 7–22** SHALL BE FIRST REDUCED TO A.S.D. DESIGN WIND LOADSBY MULTIPLYING THEM BY 0.6 IN ORDER TO COMPARE THESE W/ MAX. (A.S.D.) DESIGN PRESSURE RATINGS INDICATED ON THIS SHEET.

THIS DOOR'S ADEQUACY FOR WIND AND IMPACT LOAD HAS BEEN VERIFIED IN ACCORDANCE WITH SECTION **1626** OF THE ABOVE MENTIONED CODE AS PER PROTOCOLS TAS–201, TAS–202, TAS–203 AS PER FTL LAB REPORTS #FTL–1735, FTL–1736 AND AS PER SUBMITTED STRUCTURAL CALCULATIONS, PERFORMED AS PER SECTION 1616 OF THE FLORIDA BUILDING CODE.

2. ALL COMPONENTS SHALL BE AS SPECIFIED ON APPLICABLE DETAIL SHEETS AND AT BILL OF MATERIALS OF THIS DRAWING.

3. COMPLIANCE OF EGRESS / ESCAPE REQUIREMENTS OF THESE DOORS PER FBC TO BE DETERMINED BY BUILDING OFFICIALS ON A CASE–BY–CASE BASIS.

4. ALL SCREWS USED FOR ASSEMBLY CONNECTIONS (METAL TO METAL) TO BE STAINLESS STEEL 304 OR 316 AISI SERIES OR CORROSION RESISTANT COATED CARBON STEEL AS PER DIN 50018 WITH 50 ksi YIELD STRENGTH AND 90 ksi TENSILE STRENGTH & SHALL COMPLY W/ FLORIDA BUILDING CODE SECTION 2411.3.3.4.

5. ALL WELDING TO CONFORM W/AMERICAN WELDING SOCIETY A.W.S. D.1.3 AND D–19.0 REGULATIONS. USE E60XX ELECTRODES

6. ALL ANCHORS FOR DOOR FRAME CONNECTIONS TO EXISTING STRUCTURE SHALL BE AS SPECIFIED ON THIS DRAWING. MAXIMUM ANCHORS SPACINGS SHALL BE AS PER SECTIONS OF THIS DRAWING.

7. PROVIDE MAX. LOAD BEARING SHIM SPACE AS INDICATED IN THIS DRAWING.

8. THIS DOOR WILL NOT REQUIRE A HURRICANE PROTECTION DEVICE.

9. THESE DOOR ASSEMBLIES ARE APPROVED FOR WATER AND AIR INFILTRATION AS PER TESTING INDICATED ON NOTE 1, AND SHALL BE LIMITED TO DESIGN PRESSURE RATINGS INDICATED ON DOOR SCHEDULE ON THIS SHEET.

10. PROVIDE SPECIFIED SEALANT AT ALL DOOR FRAME AND THRESHOLD.

11. (a) THIS PRODUCT EVALUATION DOCUMENT (P.E.D.) PREPARED BY THIS ENGINEER IS GENERIC AND DOES NOT PROVIDE INFORMATION FOR A SITE SPECIFIC PROJECT; i.e. WHERE THE SITE CONDITIONS DEVIATE FROM THE P.E.D.

(b) CONTRACTOR TO BE RESPONSIBLE FOR THE SELECTION, PURCHASE AND INSTALLATION INCLUDING LIFE SAFETY OF THIS PRODUCT, BASED ON THIS P.E.D., PROVIDED HE/SHE DOES NOT DEVIATE FROM THE CONDITIONS DETAILED ON THIS DOCUMENT. CONSTRUCTION SAFETY AT SITE IS THE CONTRACTOR'S RESPONSIBILITY.

(c) THIS PRODUCT EVALUATION DOCUMENT (P.E.D.) WILL BE CONSIDERED INVALID IF ALTERED BY ANY MEANS.

(d) ORIGINAL P.E.D. SHALL BEAR THE DATE, SEAL AND SIGNATURE OF THE PROFESSIONAL ENGINEER OF RECORD THAT PREPARED IT.

12. PRODUCT MANUFACTURER'S LABEL SHALL BE LOCATED ON A READILY VISIBLE LOCATION AT PRODUCT IN ACCORDANCE WITH SECTION 1709.5 THE FLORIDA BUILDING CODE. ONE LABEL SHALL BE PLACED FOR EVERY OPENING.

THIS DRAWING SHALL ONLY BE USED TO OBTAIN PERMITS IN THE STATE OF FLORIDA

FLORIDA BUILDING CODE (HIGH VELOCITY HURRICANE ZONE)

©2023 TILTECO, INC.

TILTECO INC.
TILLIT TESTING & ENGINEERING COMPANY
6355N.W. 36th. St., Sta. 305, VIRGINIA GARDENS, FL 33166
Phone : (305)871–1530 . Fax : (305)871–1531
e–mail: tilteco@aol.com
CA–0006719
WALTER A. TILLIT Jr. P.E.
FLORIDA Lic. # 44167

SERIES LS18 FLUSH OUTSWING COMMERCIAL STEEL DOOR – L.M.

DAYBAR INDUSTRIES LTD
50 WEST DRIVE, BRAMPTON,
ON CANADA, L6T 2J4
TEL: 905 625–8000
FAX: 905 625–4204

REV. No	DESCRIPTION	DATE	REV. No	DESCRIPTION	DATE
1	OLD 20–151	08/17/23	3		
2			4		

DRAWN BY: Y.M.

08/17/2023
DATE

23–176
DRAWING No

SHEET 1 OF 5

* STRUCTURAL MEMBER AT HEADER MUST BE DESIGNED TO CARRY 174 #/FT & REVIEWED BY BUILDING OFFICIAL.

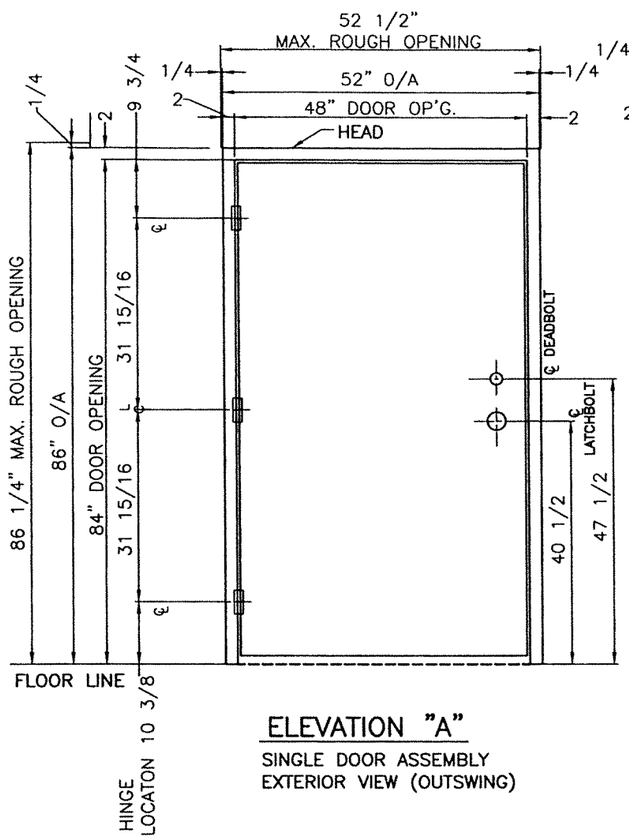

ELEVATION "A"

SINGLE DOOR ASSEMBLY
EXTERIOR VIEW (OUTSWING)

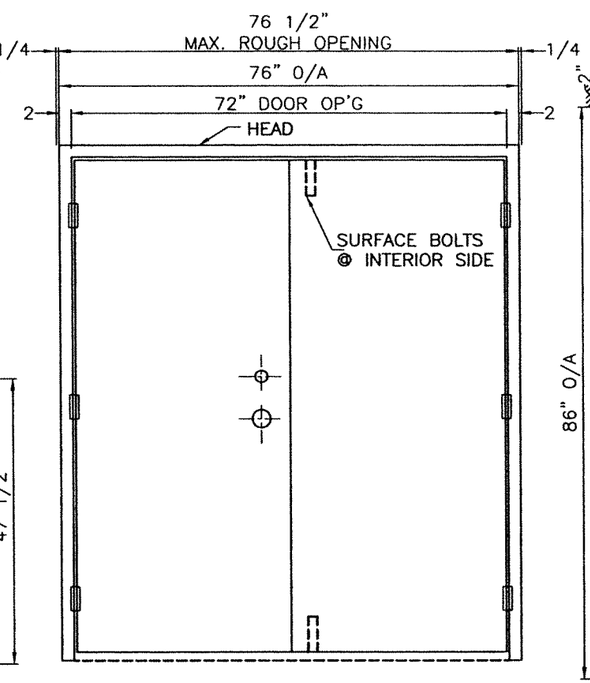

ELEVATION "B"

DOUBLE DOOR ASSEMBLY
EXTERIOR VIEW (OUTSWING)

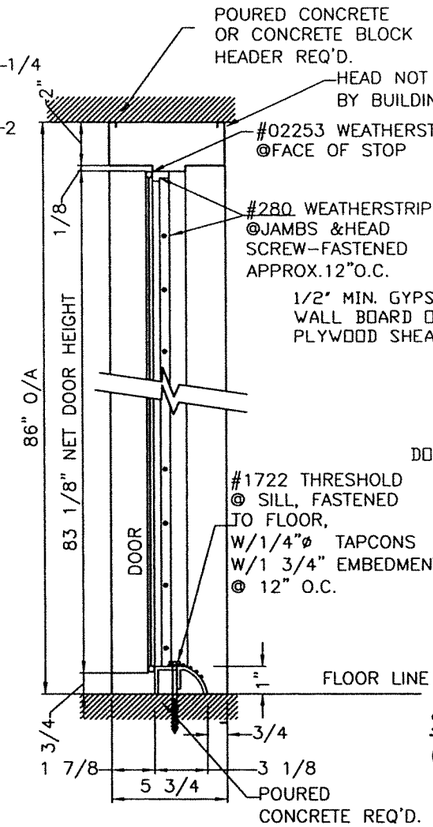

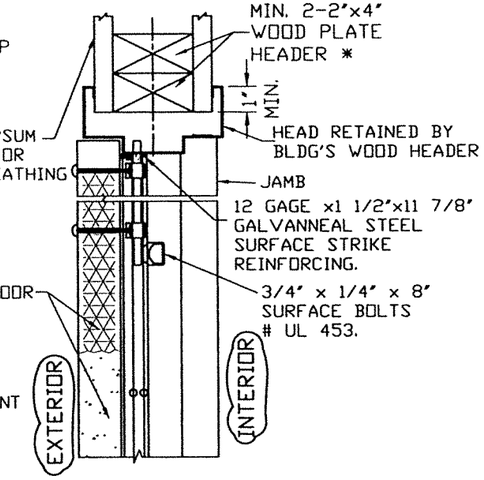

PARTIAL VERTICAL SECTION A'-A' & B'-B'.

(APPLICABLE TO WOOD FRAME BLDGS.)
FOR "A" & "B" ELEVATIONS

VERTICAL SECTION:
FOR "A" & "B" ELEVATIONS

BILL OF MATERIALS:

NOTE:
ALL STEEL HOT-DIP GALVANIZED TO ASTM A653 (CQ,LFQ), COATING DESIGNATION A25 (ZF75).

FRAME:
- JAMBS & HEAD: 16ga (.057" MIN.)
- HINGE REINF: 10 ga (.134" MIN.)
- STRIKE/DEADBOLT REINF:14ga (.075"MIN)
- MORTAR GUARDS 22ga (.027").

DOOR:
- FACE SHEET: 18ga (.045"MIN.)
- HINGE REINF: 10ga (.134"MIN.)
- LOCK REINF.,END CHANNELS, CLOSER REINF. 16ga (.057"MIN.) SURFACE BOLT REINF.
- ASTRAGAL & STRIKE TABS: 14ga (.75"MIN.)
- PAPER HONEYCOMB MF'D BY TENNECO PKG OR 1.5PCF POLYURETHANE OR 12.5 PCF MINERAL BOARD CORE BONDED TO INSIDE FACES.

HARDWARE:
- HINGES-4 1/2"x4"PENROD # PLPTSQSQ
- LATCHSET-S.PARKER #B FMS 626
- DEADLOCK-S.PARKER #92160
- SURFACE BOLTS-3/4"x1/4"x8" #UL453
- WEATHERSTRIP-AFCO#280,ALUM/VINYL
@SECURED W/#6x1/2"S.M.S.
+MD # 02253 ADHESIVE BACKED CLOSED CELL FOAM (1/8"x1/2")
- THRESHOLD-AFCO# 1722, ALUM/VINYL SECURED W/ 1/4"ø TAPCONS W/1 3/4" EMBEDMENT OR #8x2" F.H. SMS. OR #10x2" F.H.W.S.

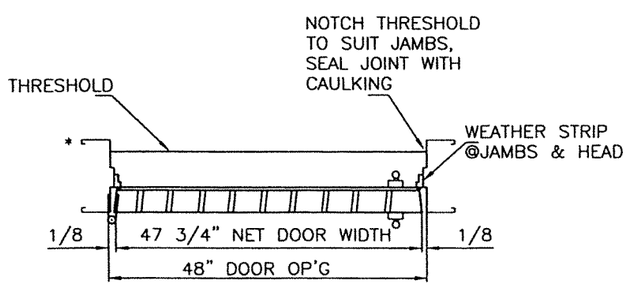

HORIZONTAL SECTION "A"

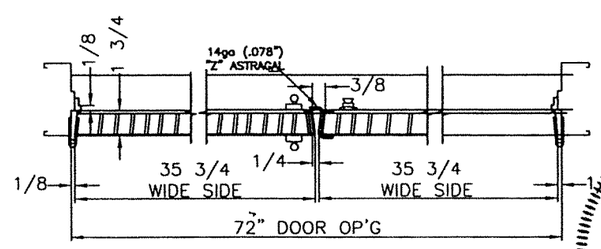

HORIZONTAL SECTION "B"

* SEE SHEET NUMBER 3 FOR JAMB ANCHORING DETAILS

WALTER A. TILLIT JR. LICENSE No. 44167 STATE OF FLORIDA PROFESSIONAL ENGINEER
8/17/2023

HOLLOW METAL DOOR ASSEMBLY DETAILS

FLORIDA BUILDING CODE (HIGH VELOCITY HURRICANE ZONE)

©2023 TILTECO, INC.

TILTECO INC.
TILLIT TESTING & ENGINEERING COMPANY
6355N.W. 36th. St., Ste. 305, VIRGINIA GARDENS, FL 33166
Phone : (305)871-1530 . Fax : (305)871-1531
e-mail: tilteco@aol.com
CA-0006719
WALTER A. TILLIT Jr. P.E.
FLORIDA Lic. # 44167

SERIES LS18 FLUSH OUTSWING COMMERCIAL STEEL DOOR - L.M.

DAYBAR INDUSTRIES LTD
50 WEST DRIVE, BRAMPTON, ON CANADA, L6T 2J4
TEL: 905 625-6000
FAX: 905 625-4204

REV. No	DESCRIPTION	DATE	REV. No	DESCRIPTION	DATE
1	OLD 20-151	08/17/23	3		
2			4		

DRAWN BY: Y.M.
DATE: 08/17/2023
DRAWING No: 23-176
SHEET 1A OF 5

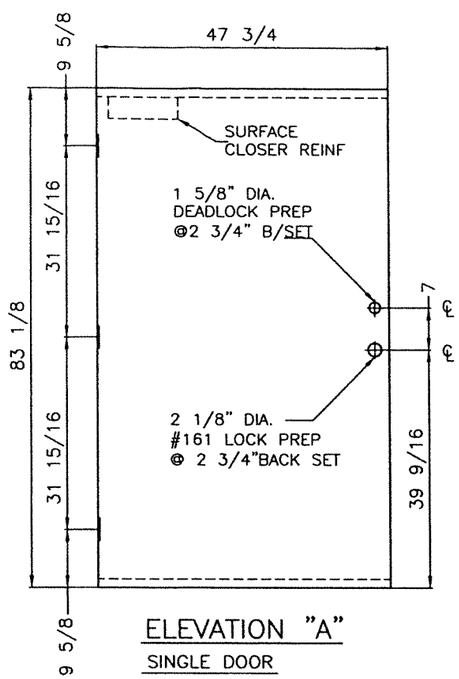

ELEVATION "A"

SINGLE DOOR

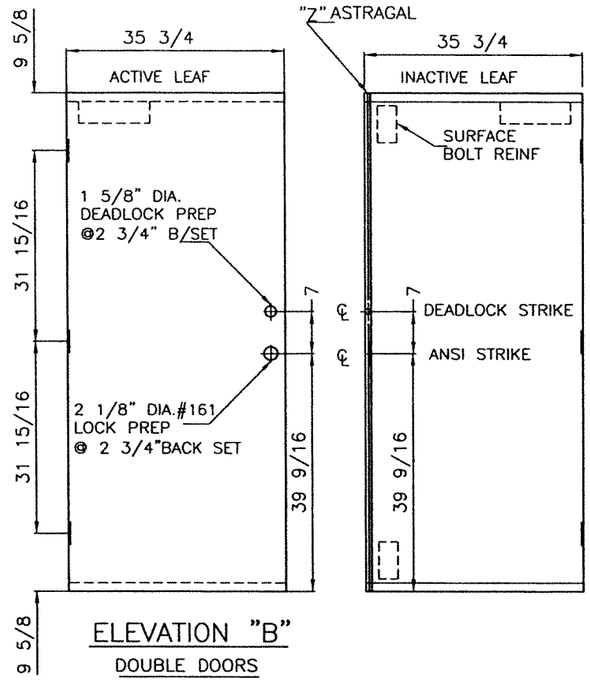

ELEVATION "B"

DOUBLE DOORS

"Z" ASTRAGAL DETAILS:

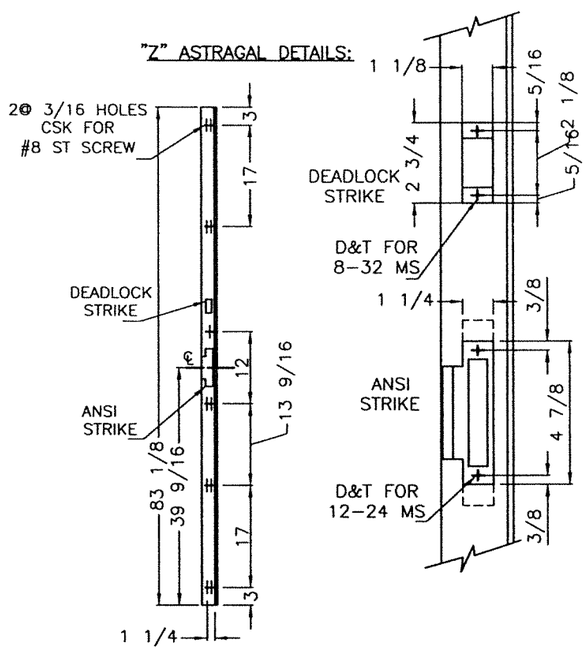

PROJECTION WELDED TO BOTH FACE SHEETS 3"O.C.

VERTICAL SECTION:

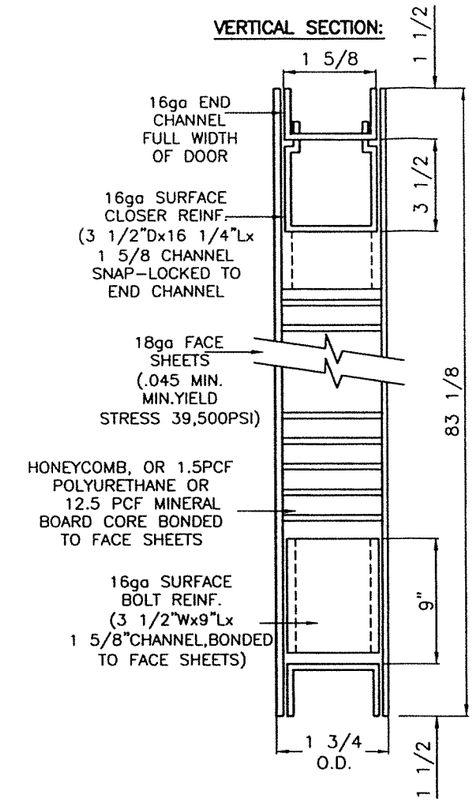

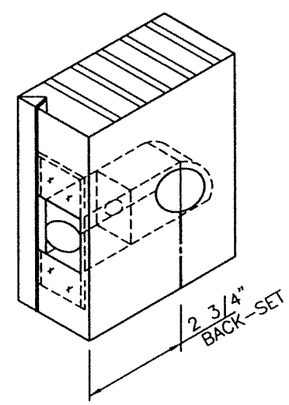

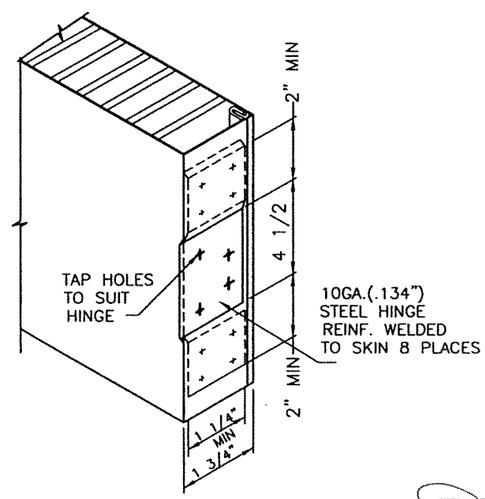

STD. HINGE PREPARATION

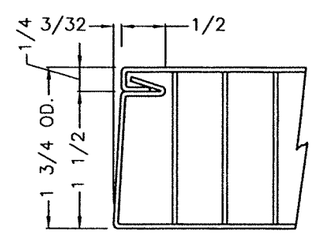

VERTICAL EDGE DETAIL

14 GA MATERIAL

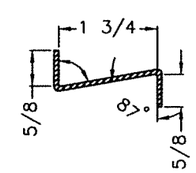

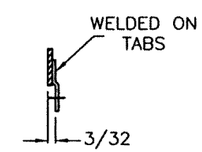

STRIKE TABS

BILL OF MATERIALS:

NOTE:
ALL STEEL HOT-DIP GALVANIZED TO ASTM A653 (CQ,LFQ), COATING DESIGNATION A25 (ZF75).

- FACE SHEET: 18ga (.045" MIN.)
- HINGE REINF: 10ga (.134" MIN.)
- LOCK REINF.,END CHANNELS, CLOSER REINF. 16ga (.057"MIN.) SURFACE BOLT REINF.
- ASTRAGAL, & STRIKE TABS: 14ga (.075" MIN.).
- PAPER HONEYCOMB MF'D BY TENNECO PKG. OR 1.5 PCF POLYURETHANE OR 12.5 PCF MINERAL BOARD CORE BONDED TO INSIDE FACES.

WALTER A. TILLIT JR. LICENSE No. 44167 STATE OF FLORIDA PROFESSIONAL ENGINEER

8/17/23

HOLLOW METAL DOOR ASSEMBLY DETAILS

FLORIDA BUILDING CODE (HIGH VELOCITY HURRICANE ZONE)

©2023 TILTECO, INC.

TILTECO INC.
TILLIT TESTING & ENGINEERING COMPANY
8355N.W. 36th. St., Sta. 305, VIRGINIA GARDENS, FL 33166
Phone : (305)671-1530 . Fax : (305)671-1531
e-mail: tilteco@aol.com
CA-0006719
WALTER A. TILLIT Jr. P.E.
FLORIDA Lic. # 44167

SERIES LS18 FLUSH OUTSWING COMMERCIAL STEEL DOOR - L.M.

DAYBAR INDUSTRIES LTD
50 WEST DRIVE, BRAMPTON, ON CANADA, L6T 2J4
TEL: 905 625-8000
FAX: 905 625-4204

REV. No	DESCRIPTION	DATE	REV. No	DESCRIPTION	DATE
1	OLD 20-151	08/17/23	3		
2			4		

DRAWN BY: Y.M.

08/17/2023 DATE

23-176 DRAWING No

SHEET 2 OF 5

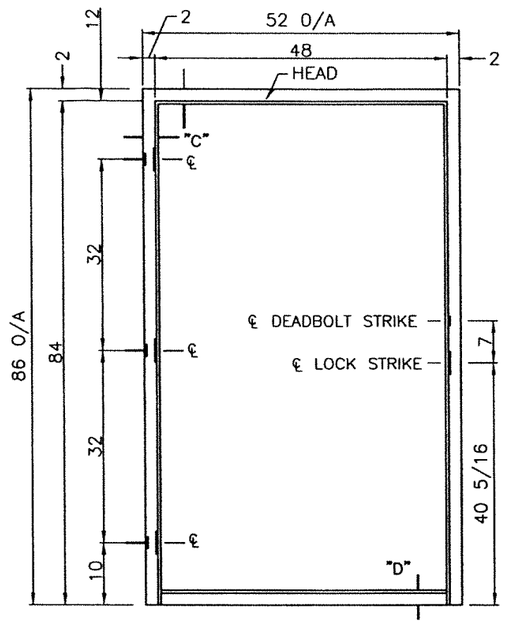

ELEVATION "A"

SINGLE DOOR FRAME

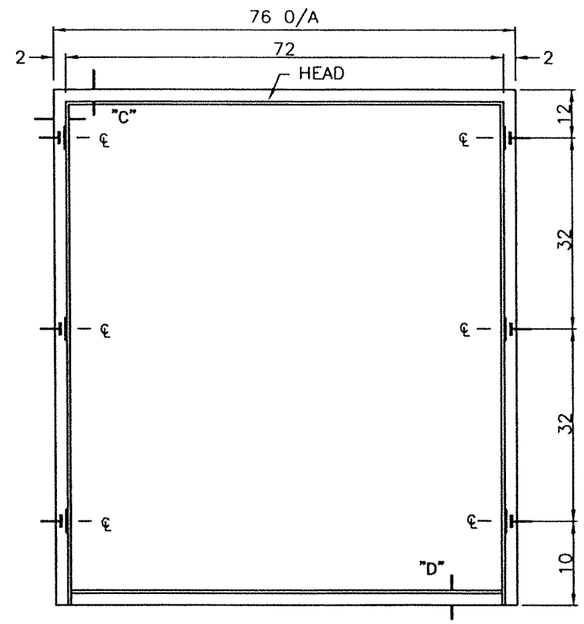

ELEVATION "B"

DOUBLE DOOR FRAME

JAMB ANCHOR LOCATION

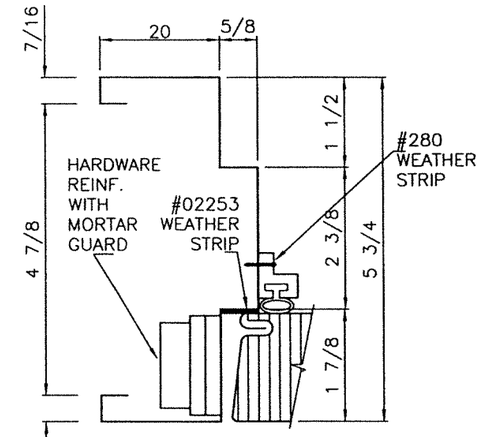

JAMB SECTION "C"

(HEAD SIMILAR)

SEE SHEET.NO.5 FOR REINFORCING DETAILS

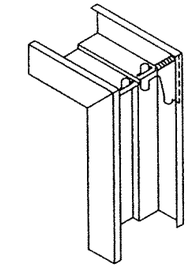

WELDED CORNER DETAIL

DIEMITRED CORNER CONT. WELDED INSIDE FACES & AT RETURNS

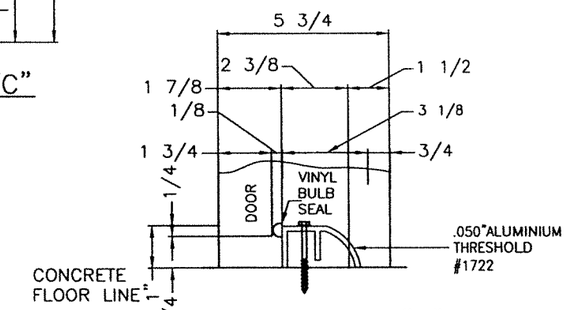

SILL SECTION "D"

#1722 THRESHOLD SCREWED TO SILL W/1 1/4" ø TAPCONS W/ 1 3/4" EMBEDMENT @ 12" O.C.

JAMB ANCHORING DETAILS:

(NO ANCHORS IN HEAD ARE REQUIRED WHEN HEADER & JAMBS SUBSTRATE IS CONCRETE OR GROUTED CONCRETE BLOCK HEAD IS REQ'D. TO BE RETAINED BY EXISTING BUILDINGS WOOD HEADER, WHEN HEADER & JAMBS SUBSTRATE IS WOOD)

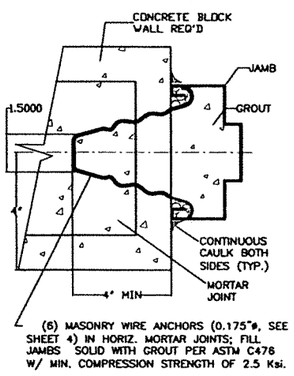

WIRE ANCHOR INSTALLATION TO MASONRY WALLS

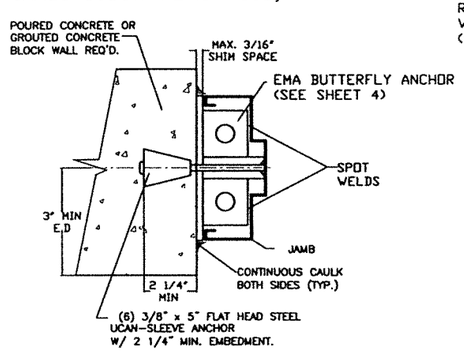

INSTALLATION OF UCAN SLEEVE ANCHORS TO MASONRY WALLS

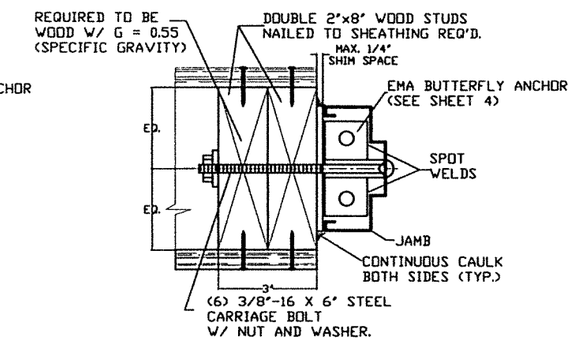

INSTALLATION OF 3/8"ø CARRIAGA BOLT TO WOOD FRAME WALLS

BILL OF MATERIALS:

NOTE:
ALL STEEL HOT-DIP GALVANIZED TO ASTM A653 (CQ,LFQ), COATING DESIGNATION A25 (ZF75).

- JAMBS & HEAD: 16ga (.057" MIN.)
- HINGE REINF: 10 ga (.134" MIN.)
- STRIKE/DEADBOLT REINF:14ga (.075"MIN.)
- MORTAR GUARDS 22ga (.027").

8/17/2023

WALTER A. TILLIT JR. LICENSE No. 44167 STATE OF FLORIDA PROFESSIONAL ENGINEER

FLORIDA BUILDING CODE (HIGH VELOCITY HURRICANE ZONE)

HOLLOW METAL DOOR ASSEMBLY DETAILS

©2023 TILTECO, INC.

TILTECO INC.
TILLIT TESTING & ENGINEERING COMPANY
8355N.W. 38th. St., Ste. 305, VIRGINIA GARDENS, FL 33166
Phone : (305)871-1530 . Fax : (305)871-1531
e-mail: tilteco@aol.com
CA-0006719
WALTER A. TILLIT Jr. P.E.
FLORIDA Lic. # 44167

SERIES LS18 FLUSH OUTSWING COMMERCIAL STEEL DOOR - L.M.

DAYBAR INDUSTRIES LTD
50 WEST DRIVE, BRAMPTON, ON CANADA, L6T 2J4
TEL: 905 825-8000
FAX: 905 825-4204

REV. No	DESCRIPTION	DATE	REV. No	DESCRIPTION	DATE
1	OLD 20-151	08/17/23	3		
2			4		

DRAWN BY: Y.M.

08/17/2023 DATE

23-176 DRAWING No

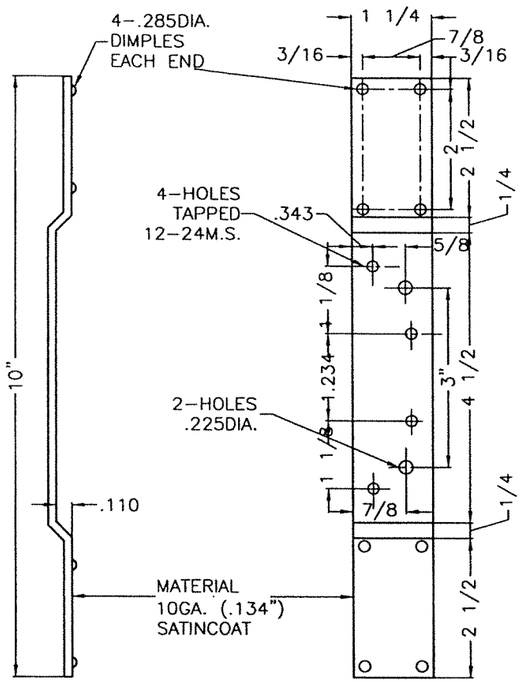

DOOR HINGE REINFORCING

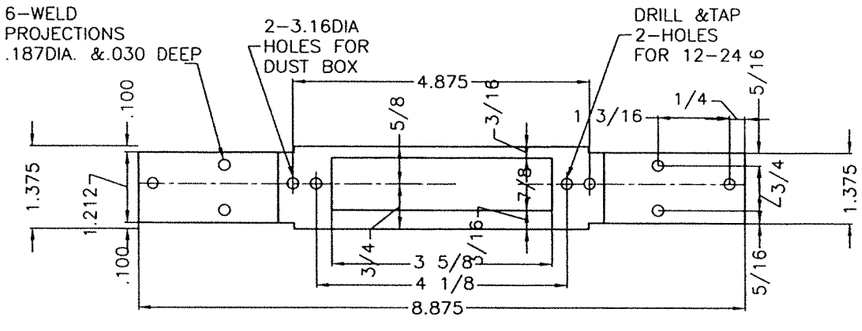

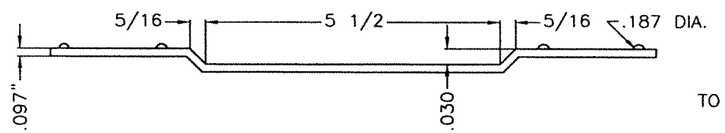

4 7/8" A.S.A. STRIKE REINF. BAR

MATERIAL 12GA.(.097") SATINCOAT
(ANSI A115.1,2)

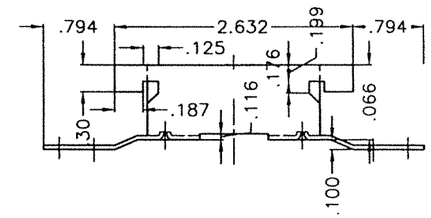

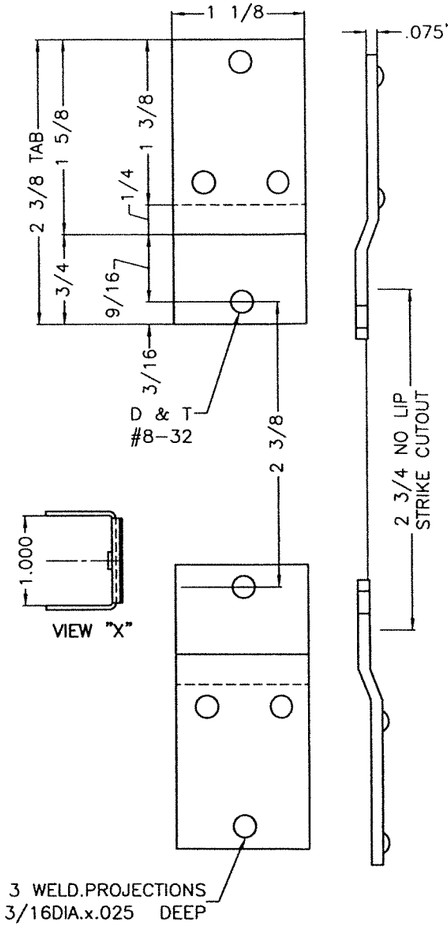

2 3/4" DEADBOLT STRIKE REINFORCEMENT
(ANSI A115.17)

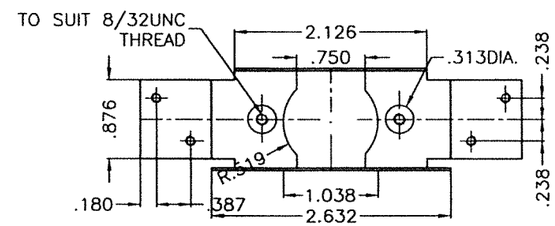

#161 EDGE REINFORCING
MAT. .045 SATINCOAT

VIEW "X"

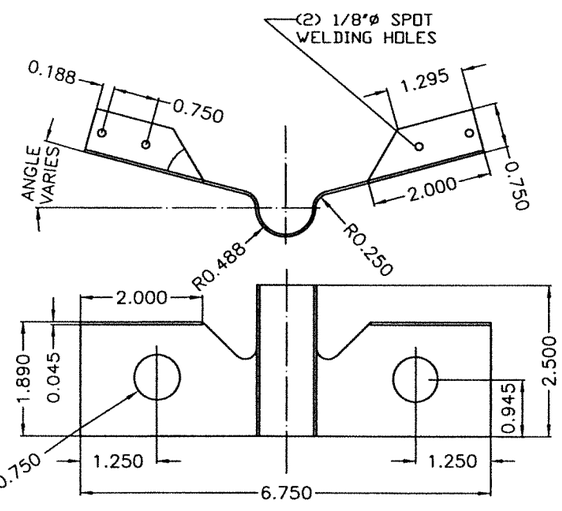

EMA BUTTERFLY ANCHOR

MATERIAL: 18 GA SATIN COAT

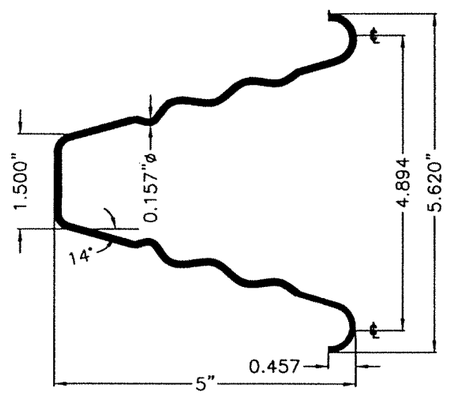

WIRE ANCHOR

STEEL WIRE ANCHORS
(0.157" DIA, 9 1/2" LONG) IN HORIZ.
Fu Min.=95.9 Ksi, Fy Min.=40.2 Ksi

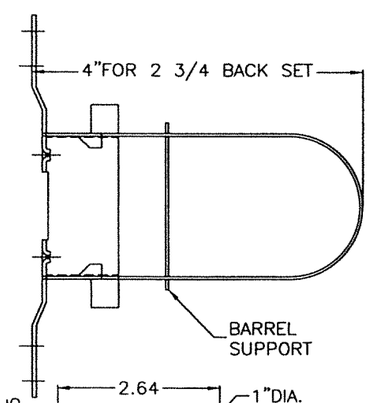

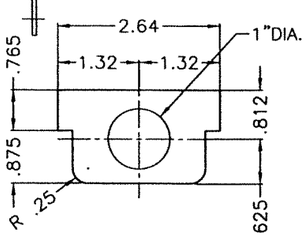

BARREL SUPPORT
MAT. .035 SATINCOAT

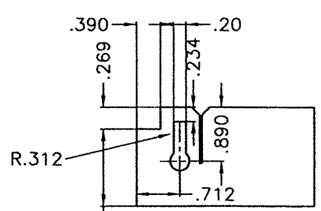

REINFORCING LOOP
MAT. .035 SATINCOAT

WALTER A. TILLIT JR.
LICENSE
No. 44167
STATE OF
FLORIDA
PROFESSIONAL ENGINEER

8/17/23

HOLLOW METAL DOOR COMPONENT DETAILS

FLORIDA BUILDING CODE (HIGH VELOCITY HURRICANE ZONE)

©2023 TILTECO, INC.

TILTECO INC.
TILLIT TESTING & ENGINEERING COMPANY
6355N.W. 36th. St., Ste. 305, VIRGINIA GARDENS, FL 33166
Phone : (305)871-1530 . Fax : (305)871-1531
e-mail: tilteco@aol.com
CA-0006719
WALTER A. TILLIT Jr. P.E.
FLORIDA Lic. # 44167

SERIES LS18 FLUSH OUTSWING COMMERCIAL STEEL DOOR - L.M.

DAYBAR INDUSTRIES LTD
50 WEST DRIVE, BRAMPTON,
ON CANADA, L6T 2J4
TEL: 905 625-8000
FAX: 905 625-4204

REV. No	DESCRIPTION	DATE	REV. No	DESCRIPTION	DATE
1	OLD 20-151	08/17/23	3		
2			4		

DRAWN BY: Y.M.

DATE: 08/17/2023

DRAWING No: 23-176

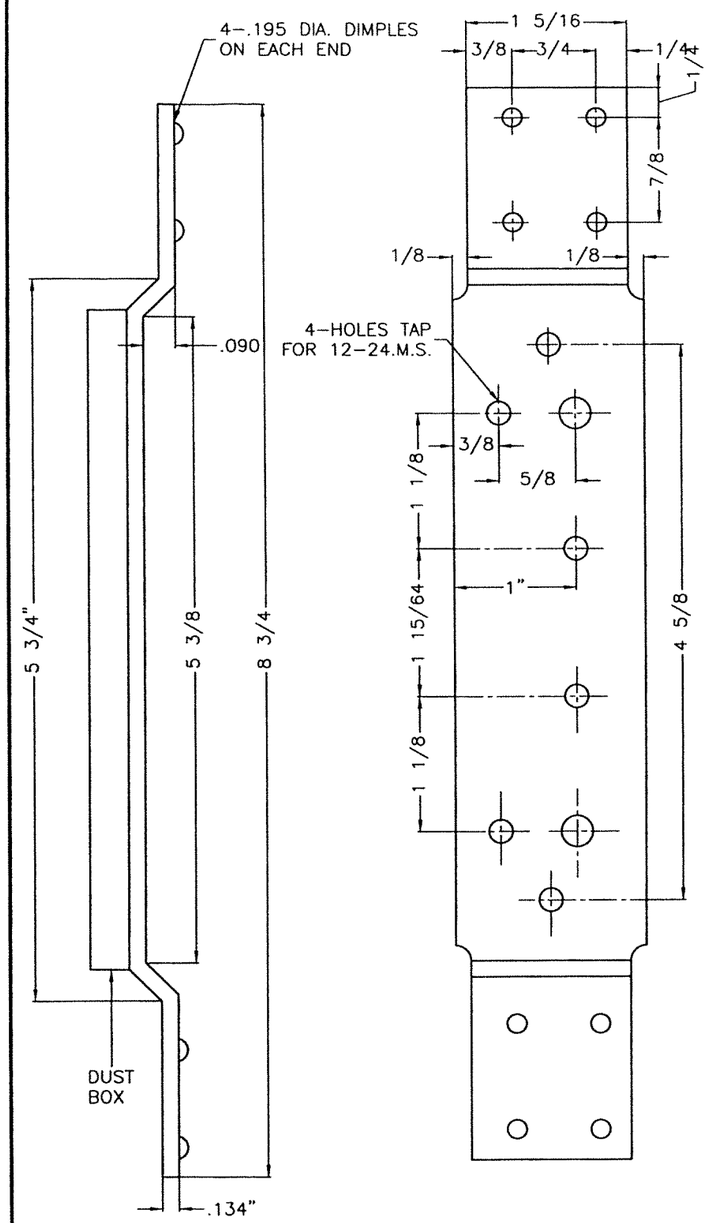

FRAME HINGE REINFORCING – 4 1/2"

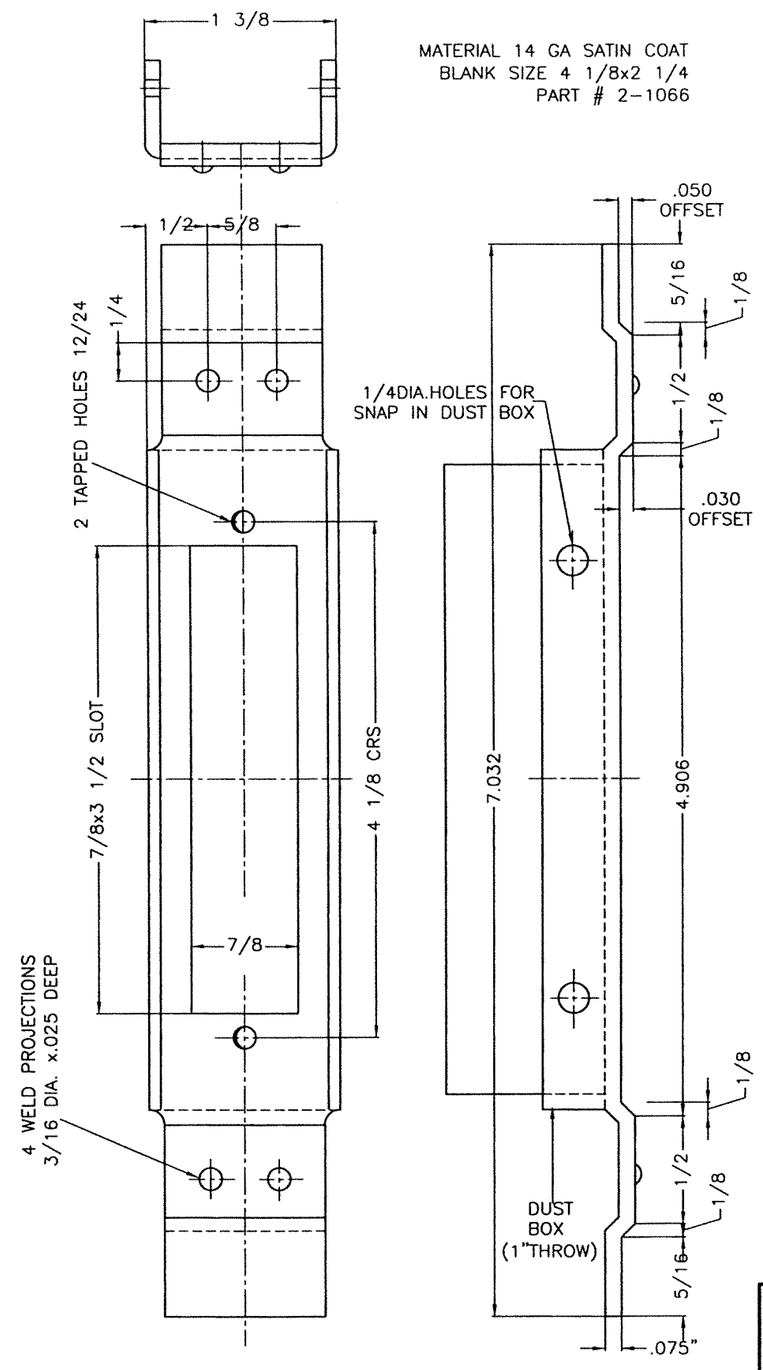

4 7/8" STRIKE REINFORCEMENT – ANSI A115.1,.2

MATERIAL 14 GA SATIN COAT
BLANK SIZE 4 1/8x2 1/4
PART # 2-1066

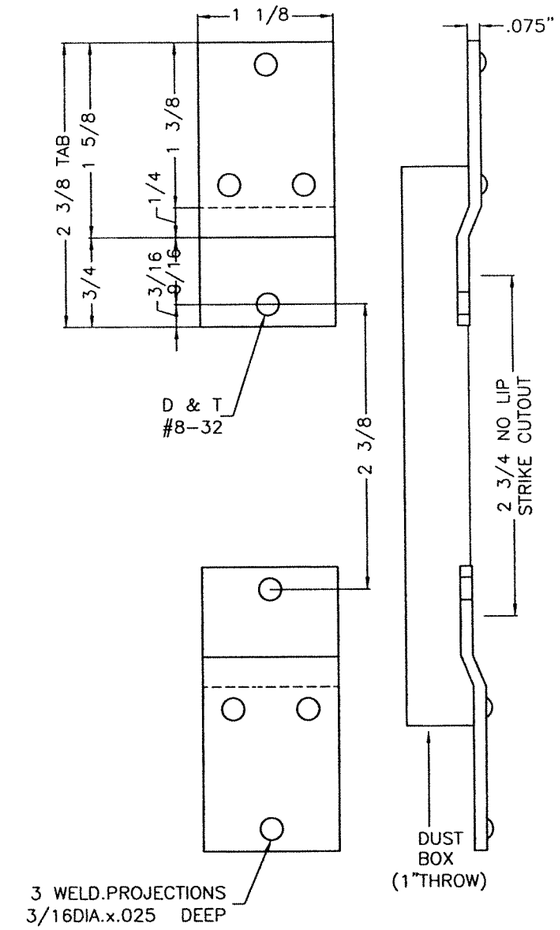

2 3/4" DEADBOLT STRIKE REINFORCEMENT
(ANSI A115.17)

WALTER A. TILLIT JR.
LICENSE
No. 44167
STATE OF
FLORIDA
PROFESSIONAL ENGINEER

8/17/23

FLORIDA BUILDING CODE (HIGH VELOCITY HURRICANE ZONE)

HOLLOW METAL FRAME COMPONENT DETAILS

©2023 TILTECO, INC.

TILTECO INC.
TILLIT TESTING & ENGINEERING COMPANY
6355N.W. 36th. St., Sta. 305, VIRGINIA GARDENS, FL 33166
Phone : (305)871-1530 . Fax : (305)871-1531
e-mail: tilteco@aol.com
CA-0006719
WALTER A. TILLIT Jr. P.E.
FLORIDA Lic. # 44167

SERIES LS18 FLUSH OUTSWING COMMERCIAL STEEL DOOR – L.M.

DAYBAR INDUSTRIES LTD
50 WEST DRIVE, BRAMPTON,
ON CANADA, L6T 2J4
TEL: 905 625-8000
FAX: 905 625-4204

REV. No	DESCRIPTION	DATE	REV. No	DESCRIPTION	DATE
1	OLD 20-151	08/17/23	3		
2			4		

DRAWN BY: Y.M.

DATE: 08/17/2023

DRAWING No: 23-176

SHEET 5 OF 5